FEATURES

- Dual in-line footprint (10-pin) for easy attachment to prototyping boards
- Small size and board stiffness minimize impact on the system and measurements
- I2C or SPI interface for simple system integration

EQUIPMENT AND DOCUMENTS NEEDED

- External host processor
- MC3610 data sheet

GENERAL DESCRIPTION

The EV3610A is a simple evaluation board that allows quick evaluation of the performance of the MC3610 ultra-low power, high-performance 3-axis accelerometer. EV3610A is ideal for evaluation of the MC3610 in an existing system because the stiffness and the small size of the evaluation board minimize the effect of the board on both the system and acceleration measurements.

The EV3610A will communicate via I2C or SPI (not both at the same time). By default, the eval board is configured for maximum flexibility at the expense of slightly higher power consumption (leakage through the resistors). Some applications may require a different configuration, as described by the options shown in the table on the following page.

PRINTED CIRCUIT BOARD (PCB) LAYOUT

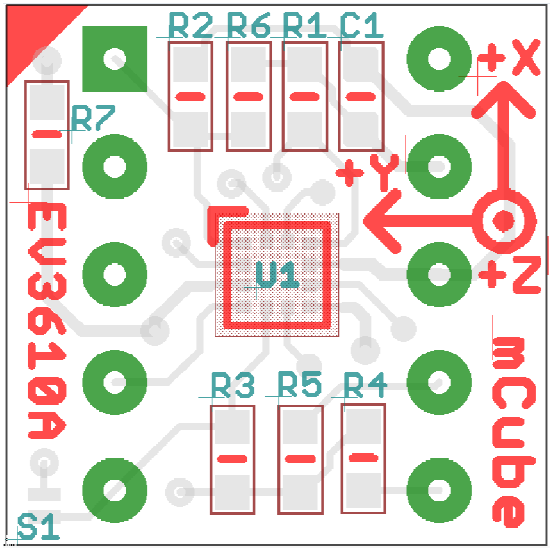

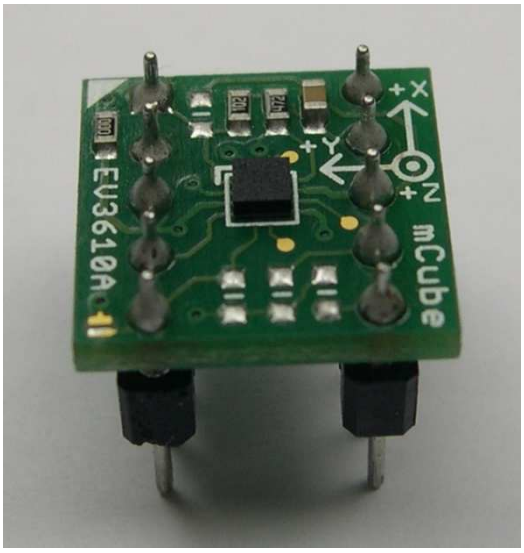

© 2015 mCube Inc. All rights reserved.

PCB OPTIONS

1) Select the desired bus interface according to the table below:

Interface	R1	R2	R6
SPI @ 1MHz	4.7KΩ to 100KΩ	DNI	4.7KΩ
I2C 0x6C or SPI @ 2MHz (factory default)	4.7KΩ	DNI	1KΩ
I2C 0x4C (0x98)	4.7KΩ to 100KΩ	10KΩ	DNI
I2C 0x6C (0xD8)	4.7KΩ to 100KΩ	DNI	10KΩ

DNI = Do Not Install

2) **R3**: If using the sensor interrupt signal as open-drain, then install pull-up resistor ~4.7KΩ into R3 (not installed by default).

3) **R4, R5**: If using I2C and I2C pull-up resistors are needed for your application then install ~4.7KΩ resistors into R4 and R5 (not installed by factory default).
NOTE: DO NOT install more than one set up pull-up resistors per I2C bus.

4) **R7**: The current drawn the sensor can be measured by putting an ammeter in place of R7.

EVALUATION BOARD SCHEMATICS

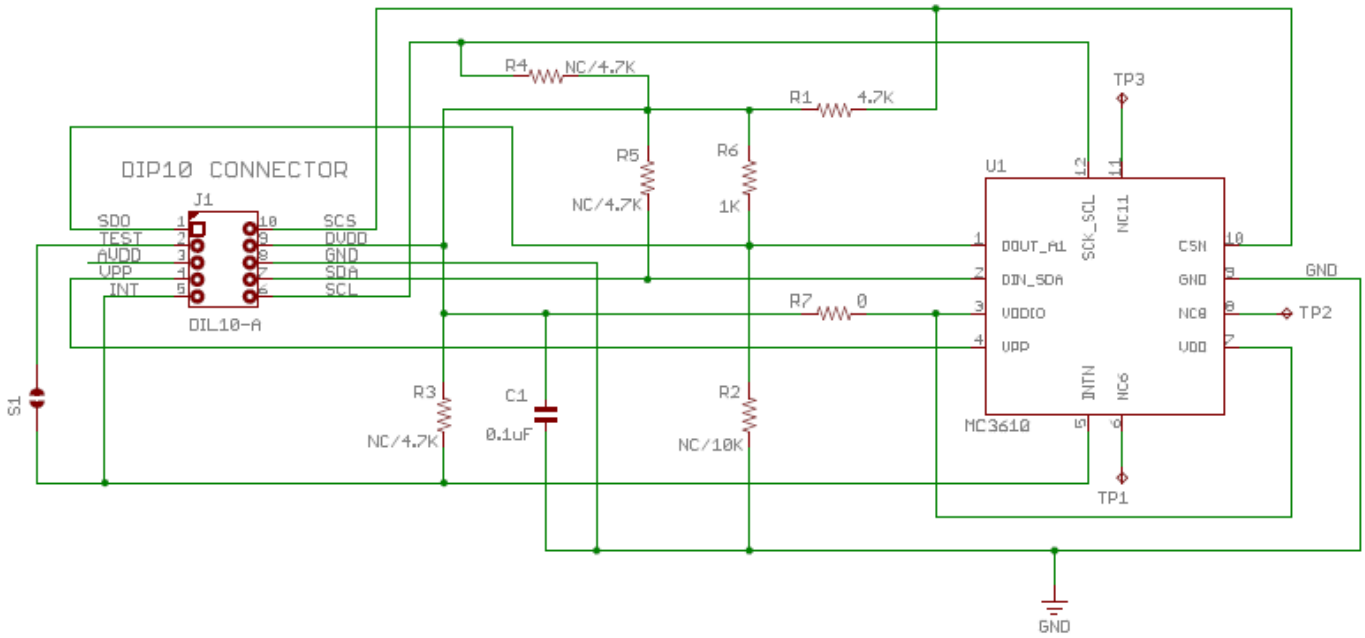

© 2015 mCube Inc. All rights reserved.

BILL OF MATERIALS

Item	Reference	Value	Package	Part Number	Install
1	U1	MC3610	LGA12 (2x2)	MC3610	Yes
2	C1	100nF	C0603	0603B104K500	Yes
3	R1	4.7KΩ	R0603	WR06X472JTL	Yes
4	R6	1KΩ	R0603	WR06X102JTL	Yes
5	R7	0Ω	R0603	WR06X000PTL	Yes
6	R2	10KΩ	R0603		No
7	R3	4.7KΩ	R0603		No
8	R4	4.7KΩ	R0603		No
9	R5	4.7KΩ	R0603		No

RELATED LINKS

Resource	Description
MC3610	MC3610 3-Axis Accelerometer Datasheet

© 2015 mCube Inc. All rights reserved.